Instructions for STC3295 drop arm repair kit

DROP ARM

Remove and refit

Service tools:
MS252A Drop arm extractor

Removing

1. Place the vehicle on a suitable hydraulic hoist, alternatively raise the front of the vehicle using a hydraulic floor jack and install axle stands under the front axle, remove the floor jack.
2. Disconnect the drag link from the drop arm ball joint, using a suitable extractor.

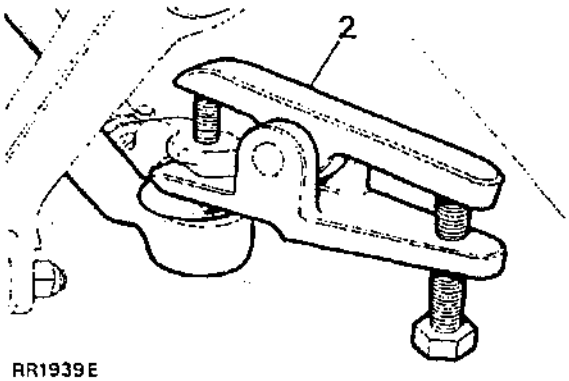

RR1939E

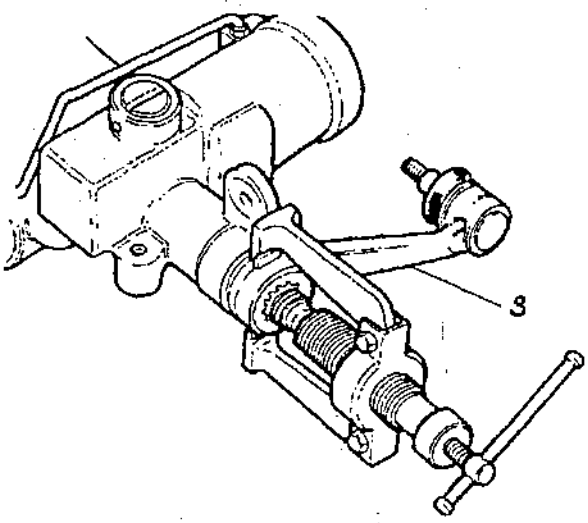

3. Remove the drop arm from the steering box rocker shaft, using extractor MS252A.

NOTE: The drop arm ball joint is integral with the drop arm.

Refitting

4. Set the steering box "on-centre". This is achieved by rotating the steering wheel to the full inner lock (ie full left lock for a right hand drive vehicle or full right lock for a left hand drive vehicle). Then turn the steering wheel back towards the centre exactly two full turns.
5. Fit the drop arm in position, aligning the master splines.
6. Fit the drop arm fixing and tighten to the correct torque (see section 06-Torque values).
7. Fit the drag link and tighten to the correct torque (see section 06-Torque values).

DROP ARM BALL JOINT

Overhaul

The drop arm ball joint can be overhauled with a repair kit available which consists of the the following items:

Ball pin	Ball lower socket
Retainer	Spring
Spring rings	'O' ring
Dust cover	Cover-plate
Ball top socket	Circlip

Dismantle

1. Remove the drop arm from the vehicle and clean the exterior.
2. Remove the spring rings and prise off the dust cover.
3. In the interests of safety, position the ball joint under a press to relieve the spring tension and support the housing both sides of the ball pin, as illustrated. Apply pressure to the cover plate and remove the circlip and slowly release the pressure.

WARNING: Personal injury could result if the circlip is removed without pressure being applied and maintained to the cover plate.

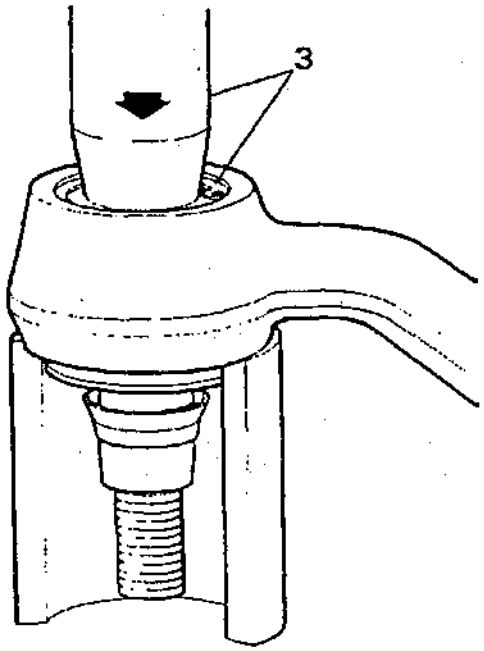

ST1382M

4. Remove the spring, top socket and 'O' ring.
5. Since the ball pin cannot be removed with the retainer in position, tap the threaded end of the ball pin to release the retainer and to remove the pin from the housing.

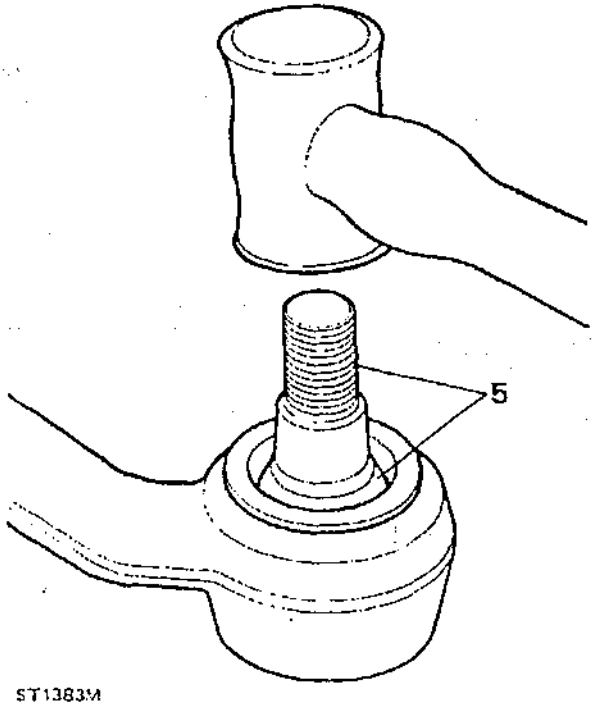

ST1383M

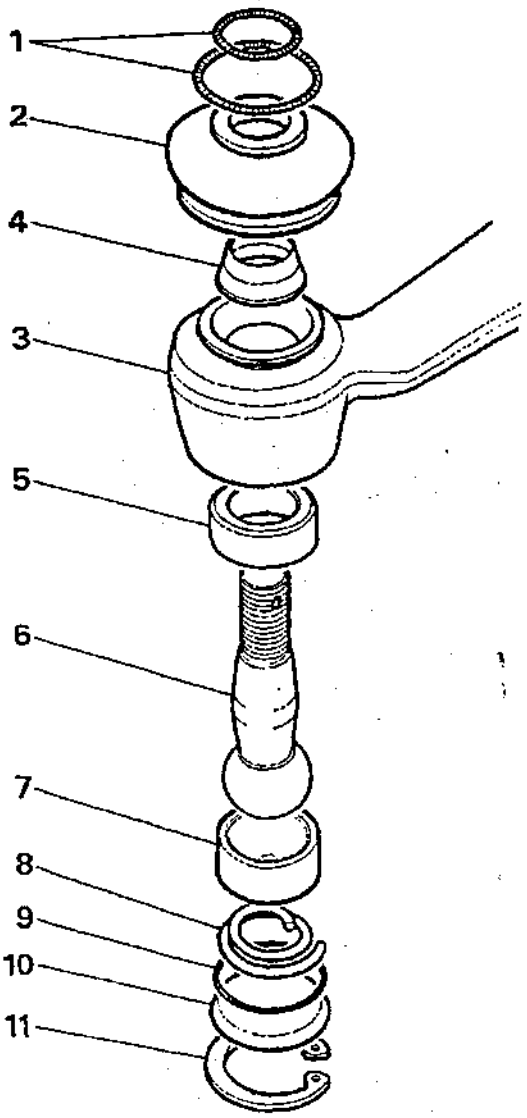

ST1381M

KEY TO BALL JOINT

1. Spring rings
2. Dust cover
3. Ball housing
4. Retainer
5. Bottom socket
6. Ball pin
7. Top socket
8. Spring
9. 'O' ring
10. Cover-plate
11. Circlip

6. Using a sharp-edged punch or chisel, drive the ball lower socket from the housing.
7. Clean the housing and remove any burrs.

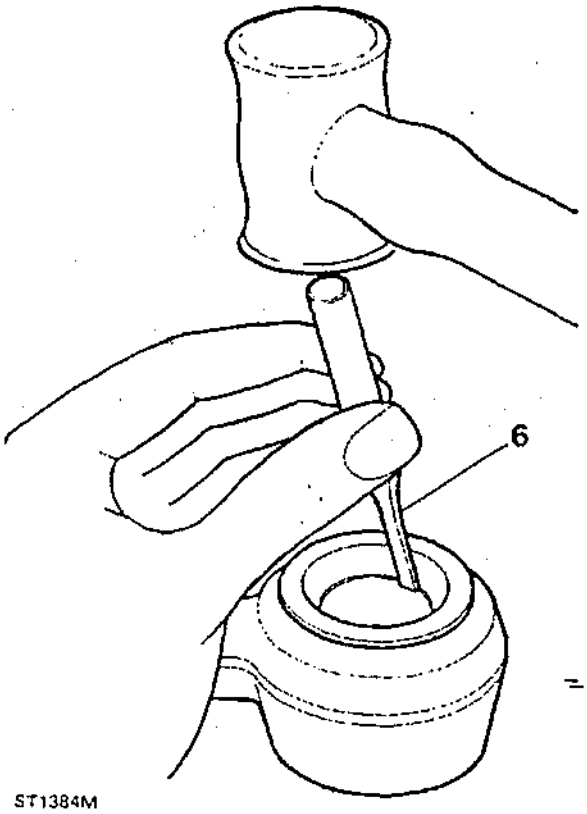

Assemble

8. Press in the lower socket squarely up to the shoulder.
9. Dip the ball in Duckhams LB10 grease, or equivalent and fit to the housing and pack with grease.
10. Fit the top socket.
11. Fit the spring, small diameter towards the ball.
12. Fit the 'O' ring and using the same method as for removing the circlip, compress the cover plate and secure with the circlip. Ensure that the circlip is fully seated in the machined groove
13. Press the retainer onto the ball pin so that the top edge is level with the edge of the taper.

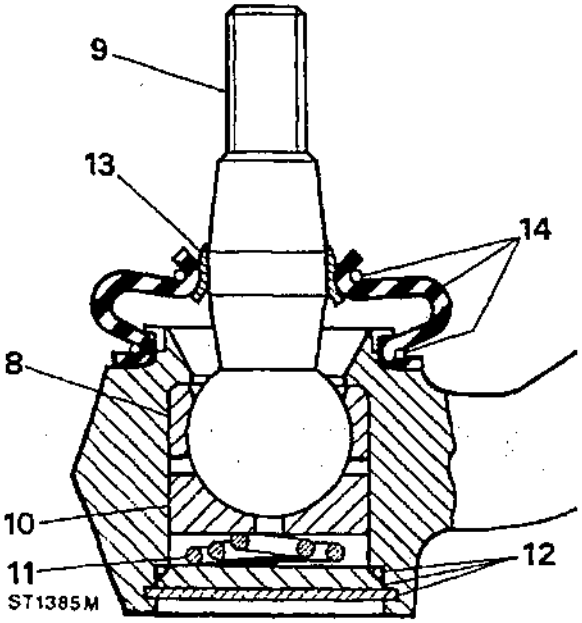

14. Fit the dust cover and retain with the two spring rings.
15. Fit the drop arm to the steering box using a new lock washer. Tighten the retaining nut to the correct torque (see section 06-Torque values)and bend over the lock washer.
16. Assemble the ball pin to the drag link, see instructions for fitting drag link and track rod, tighten the castle nut to the correct torque (see section 06-Torque values)and secure with a new cotter pin.